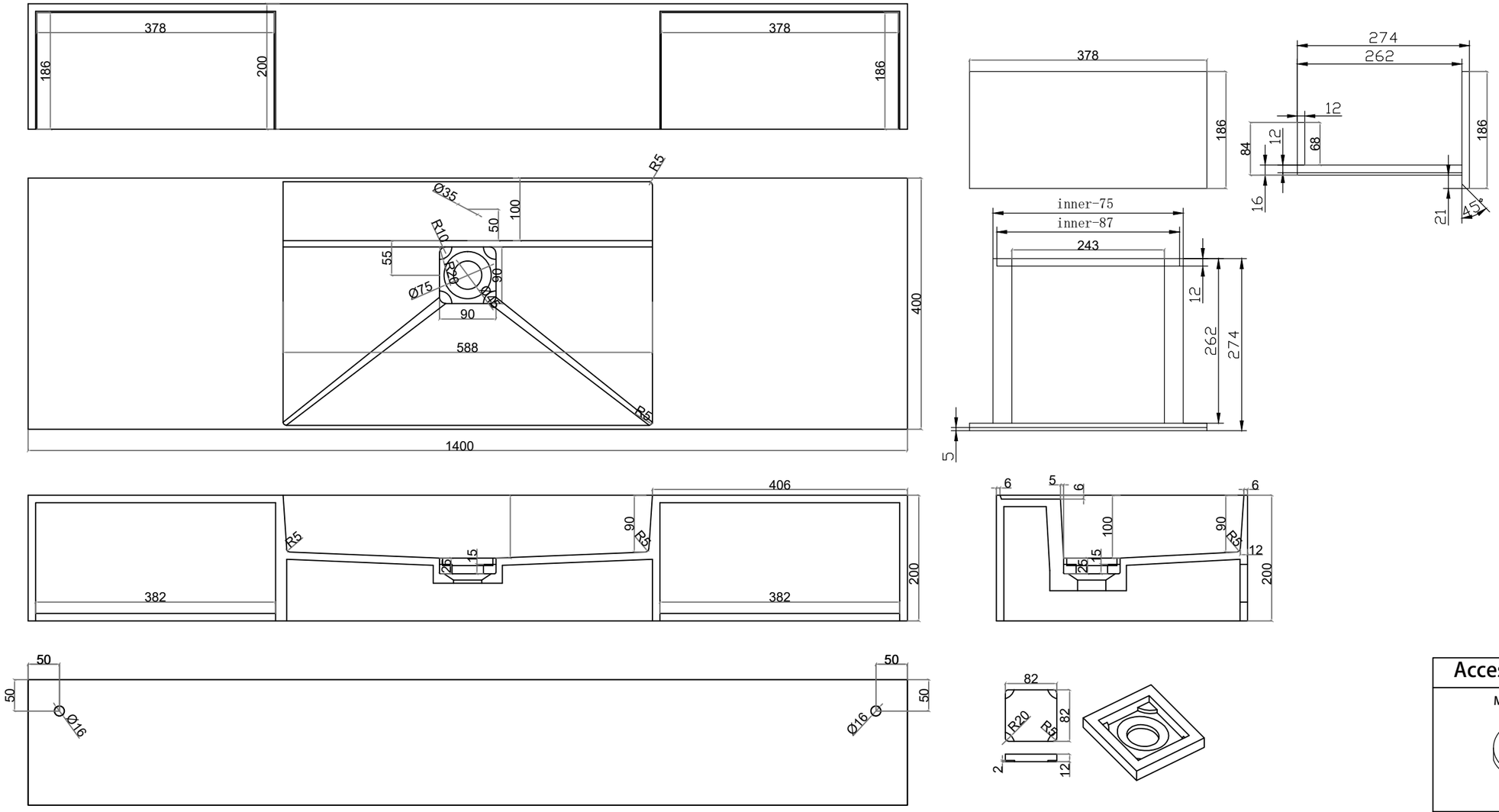

Accessories List

Metal Gasket 2PCS	Rubber Gasket 2PCS
M8 Nut 2PCS	Magic Sponge 1PC
M8 Screw 2PCS	Rubber Buffer 2PCS

IDEAVIT	PROJECT TITLE SOLIDBLISS-140DR with 2 drawers	DIMENSIONS (MILLIMETER) 1400 X 400 X 200	TOLERANCE (MILLIMETER) ± 1	WEIGHT (KILOGRAMS) -	PAPER SIZE A3
	ARTICLE NO. 290323	DATE		SCALE : 1: 5	REV. A-01